Spectacular Discharges and Large Tesla Coils

To the uninitiated in electrical science there is probably no more entrancing and awe-inspiring effect to be seen than the spectacular display produced by the Tesla transformer. There are many acts traveling over the various theatre circuits which make use of the Tesla high frequency apparatus, and herein we will describe briefly how to construct one of these large 36" spark Tesla coils, together with necessary exciting transformer, auxiliary condenser and also spark gap.

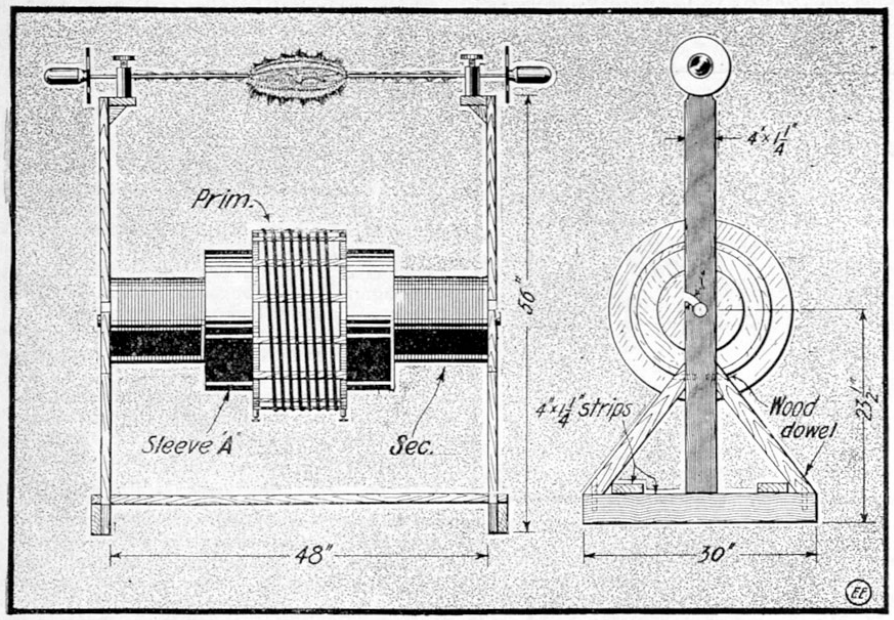

Fig. 2A. Appearance of Complete Tesla Coil for Use on 1 K. W. Transformer.

Referring to Fig. 1, the complete closed core type high voltage 1 kilowatt transformer is shown at A. As seen, the secondary and primary coils are wound each on one of the longer legs of the sheet iron core. The completed transformer may very well be mounted in a metal or lead lined wooden case, as shown at B, which is afterward filled with transit oil. The transformer is mounted on a couple of wood blocks, as indicated, placed inside the case.

Referring to details on this transformer, which is designed for operation on 110 volt, 60 cycle A. C. circuit, at a current of 9 to 10 amperes maximum, the dimensions and method of assembling the alternate layers of sheet iron strips are shown at C, Fig. 1. As seen, the individual strips, such as Nos. 1, 2, 3, 4, are staggered or lapped over the joints between the strips on the layer under it, as indicated by the dotted lines. In this way a solid core is easily built up and at either end suitable clamps made from a couple of pieces of iron or brass, with a couple of bolts, should be used to clamp it firmly together.

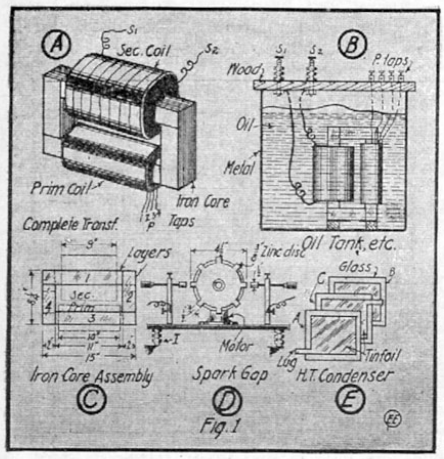

Fig. 1. Details of Step-Up Exciting Transformer, Condenser, and Spark Gap.

The transformer coils are best wound on wooden forms. The primary is 10" long and has on it 12 pounds, or 344 turns, of No. 10 B. & S. D. C. C. wire, with taps from the 250, 300, 344, and 1st turn for secondary voltage adjustment. Wrap several layers oiled linen around the primary core before slipping on the coil. Details on winding are given in any handbook on transformers.

The secondary comprises 11 pounds, or 50,000 turns, of No. 33 B. & S. enameled magnet wire, wound in 24 wax-impregnated pies or sections, each ¼" thick. Secondary then gives about 20,000 volts, with 250 primary turns in circuit. An adjustable choke coil like the primary in construction helps out the control nicely. The secondary core leg is to have 10-12 layers of oiled linen on it before the secondary pies are slipped over it.

The spark gap used for this 1 kilowatt high frequency generating outfit is probably best made of the rotary type, as shown at D, Fig. 1. This gap is composed of a zinc disc, about 4½" in diameter, having 8 to 10 projecting plugs cut on same as shown, to provide sparking points, as the disc is rotated by a suitable motor. This may be an ordinary fan motor. Two stationary spark electrodes are provided, as indicated, and the whole arrangement is best mounted on a marble or glass base. A piece of hard wood thoroughly boiled in hot wax may be utilized for the base.

Regarding the high voltage glass plate condenser for this outfit its arrangement is shown at E, Fig. 1. About .042 M. F. capacity is required in this condenser when the transformer delivers 20,000 volts, 60 cycle A. C., at the secondary terminals. If ordinary glass is used 1/16" thick, about 46 such plates measuring 12x14" are necessary, both sides of the plates being coated with heavy tinfoil 8x10", cut with a projecting connection lug as shown at E. When the condenser has been prepared it may be mounted in a cabinet suitably built and then filled with parafine or transit oil. The glass plates are placed one on top of the other in the final assembly, and there is only, of course, 1 tinfoil leaf between each plate. Every other tinfoil leaf connects to a common terminal, and in this way all the glass plates connected are charged and discharged when in circuit.

The dimensions for the large Tesla coil to be used with this outfit, capable of producing 30 to 36" high frequency sparks when all of the apparatus is properly tuned and adjusted, are given at Figs. 2 and 2A. This special large size, extra high voltage, high frequency air core transformer, is built at small cost and consists of a primary and secondary coil as usual, as well as an insulating sleeve A, ¾" thick, made of shellacked paper or oiled linen.

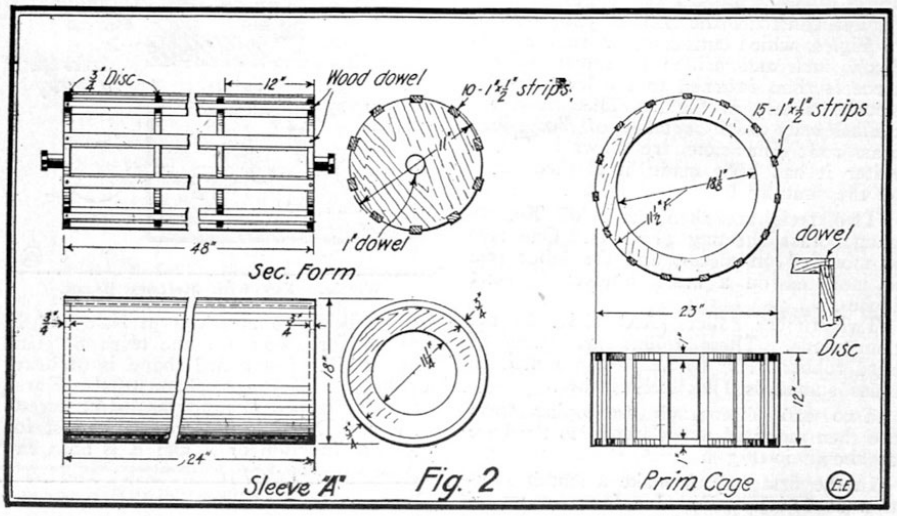

Fig. 2. Details of Large 36-Inch Spark Tesla Coil Parts.

The wooden framework for supporting the coils is indicated quite clearly in the drawing, and all of the wood parts are best boiled in hot wax. No metal parts, excepting the wire on the coils, should be used in constructing this transformer. The wood joints are readily held together securely by drilling ¼" holes and driving in same wooden dowel pins.

The secondary cage is made up of four

wood discs with 10 wood strips doweled fast to them as shown. The primary form is made in the form of a cage also, as indicated, of two wood rings and 15 wood strips, also held in place by wood dowels.

The primary of this large Telsa coil can be wound with 10 turns of No. 4 B. & S.

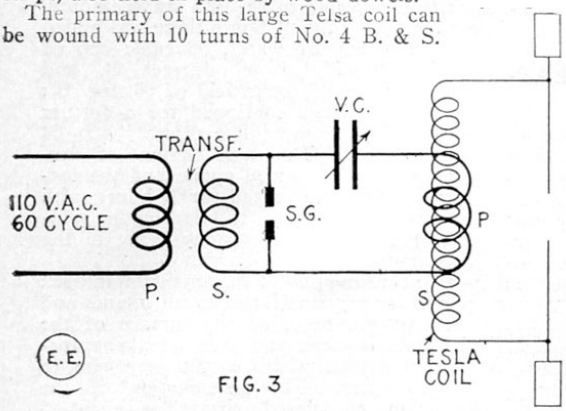

Hook-Up of Large Tesla Coil and Exciting Transformer.

bare copper, brass or aluminum wire spaced 1" between turns and the ends of the coil brought out to two binding posts. A substantial helix clip should be provided for one terminal of the primary circuit for adjustment. The secondary coil is wound with one layer No. 24 B. & S. enameled magnet wire, and each turn should be spaced apart the thickness of the wire by winding on a lathe, etc. Before winding the secondary coil the wooden cage may be covered with several layers of stiff paper or a layer of Bristol board. The layers of wire should be well shellacked.

The connections for the complete outfit are shown at Fig. 3, where V. C. is the high voltage condenser arranged to be adjustable, and S. G. is the rotary spark gap. P. & S. are the primaries and secondaries, respectively, of the transformers. Tune the set for best results by altering the condenser plates on multiple and gap speed, the exciting transformer, and the Tesla primary turns in circuit. Use No. 6 wire or, better, copper ribbon for the high frequency connections.